DynAmp

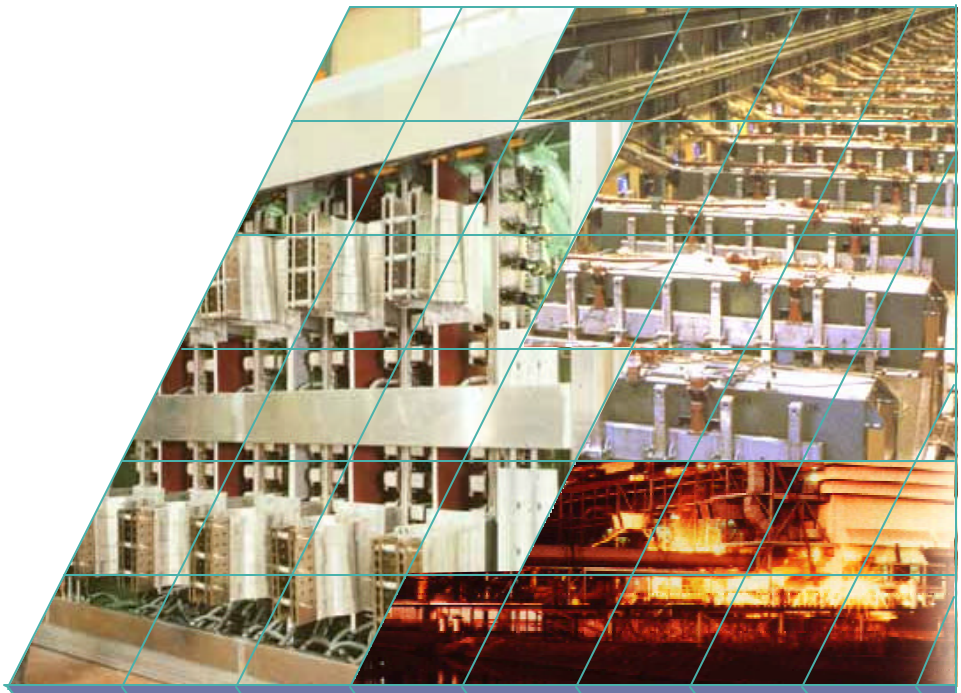

VDAS

Process Monitoring System For Membrane Cell Chlorine Electrolysers

DynAmp - Global Leader in High Current Solutions

DynAmp headquarters, Columbus, Ohio, USA

Formed with the combined know-how of Halmar and LEM, DynAmp has a unique understanding of electrochemical processes and high power conversion applications. With over 30 years of experience, thousands of systems have been installed in electrochemical and other energy intensive processes throughout the world. Combining this in-depth experience with advanced technology enables us to provide the most accurate and reliable power conversion and process monitoring systems available.

The DynAmp model LKP High current monitoring system is the global standard for reliable, accurate measurement of high current in electrochemical applications.

DynAmp developed a proprietary Bus Analysis™ software to model electromagnetic fields in these applications to ensure the highest performance.

From this strong foundation we developed OLOP™, a new measurement technology yielding a new generation of measurement, monitoring and protection products.

DynAmp recently launched a second generation rectifier monitoring system. The new RCEM monitors the health of high power rectifiers by measuring current balance between each device in the rectifier. Systems configured for permanent installation are PLC based and provide Modbus Plus communication for easy integration into existing networks and supervisory systems.

CPMS System Console

Chlor-Alkali Solutions

Specific to the Chlor-Alkali Industry, DynAmp was instrumental in pioneering the concept of process monitoring as early as 1970 with the CPMS cell parameter monitoring system. More recently DynAmp updated this know-how with the development of the AMACS system, again for Chlor-Alkali process monitoring.

Installations : Oxy Chem (6 plants), Dow, FMC, Georgia Pacific, Monsanto, Olin, Penwalt

The New VDAS:
A Monitoring System for Membrane Cells

DynAmp recognized the need for a cost effective solution for monitoring membrane cell process lines. Unlike other systems assembled only from existing off-the-shelf 'building blocks', VDAS is based on an application specific DynAmp designed platform utilizing industry standard architecture. This approach is extremely cost effective and ensures fast, reliable data acquisition and rapid repair in the unlikely event of a problem.

Since safety is always a primary concern, VDAS provides comprehensive isolation between inputs and inputs to output. All enclosures are made of fiberglass and designed to provide years of service in the harsh environment of a chlorine facility.

VDAS System Overview

VDAS allows users to monitor the condition of bipolar membrane cells via measurement, analysis and display of electrical parameters critical to proper operation. The system monitors individual electrolyser cell voltages, total electrolyser current and voltage signals, and symmetry within each electrolyser. Configuration is modular starting with multiple Stack Junction Boxes of up to 64 channels each connected to one Electrolyzer Monitor Unit. The example system diagram below is configured to monitor 164 cells but the same general configuration could be configured to monitor up to 189 cells. Applications with more than 189 cells can also be accommodated by adding another Stack Junction Box and related hardware.

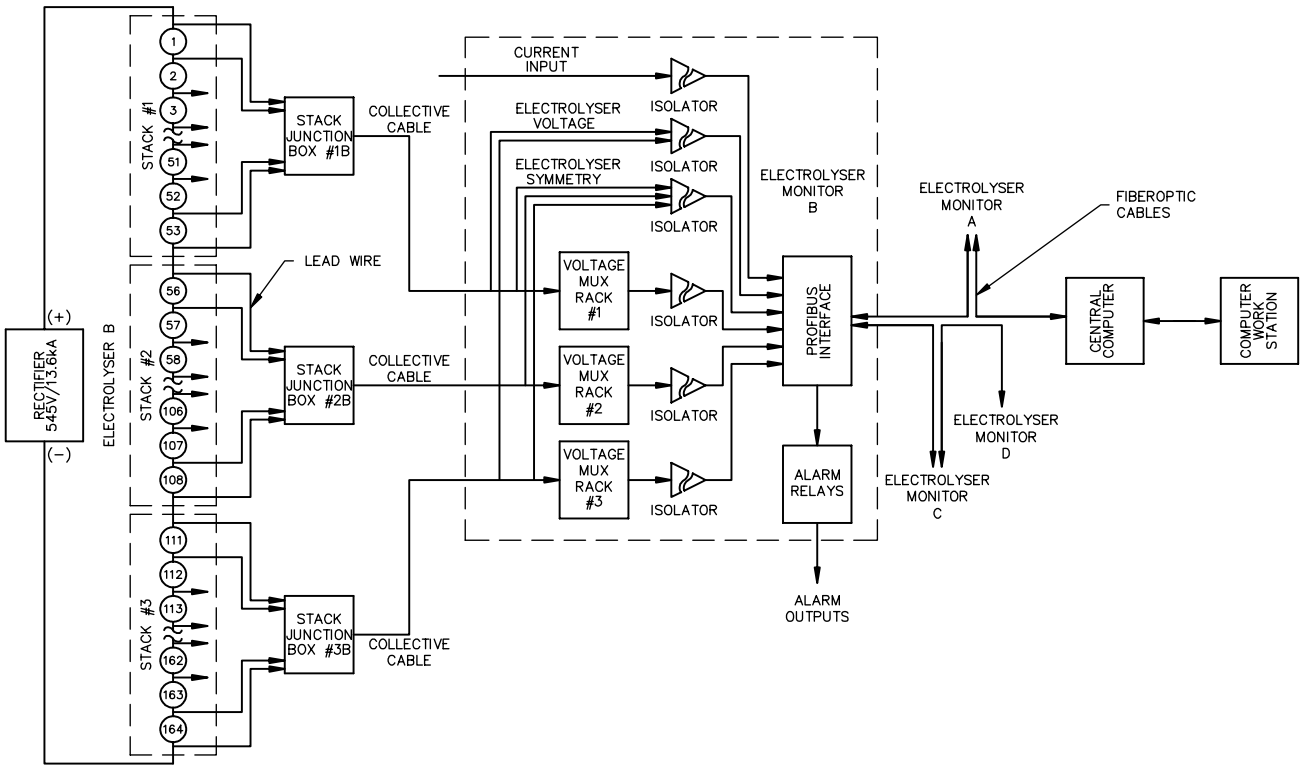

VDAS Configuration

Each electrolyser is equipped with multiple stack junction boxes and an electrolyser monitor. Multiple electrolyser monitors can be connected to a single central computer system, and an operator's workstation to provide plant wide monitoring. Communication between the central computer and electrolyser monitor is accomplished via fiber optic cables using Profibus DP or other protocol as defined by the customer.

Uhde electrolysers

Process Connection Points

The VDAS obtains its process data from a number of locations.
A current signal is obtained from the DC bus current measurement system. As there only needs to be one current measurement per electrolyser, this signal is connected directly to the Electrolyser Monitor.
A voltage sense lead connected to each cell of the electrolyser allows the VDAS to determine the exact voltage drop of each and every cell. Fusing and protection is integrated into each connection point to ensure the highest degree of safety.

Electrolyser Stack Junction Boxes

In order to manage the high number of voltage sense leads efficiently, a junction box is utilized for each electrolyser stack. Typically, each Electrolyser Stack Junction Box accepts up to 64 channels of cell voltage sense inputs. Each Electrolyser Stack Junction box transmits all gathered analog voltage data to the Electrolyser Monitor via a single output cable. To ensure measurement integrity, the junction boxes are mounted near the electrolyser. The enclosures are constructed of fiberglass and include water tight strain relief for input and output cables. A dimensional drawing of the junction boxes is shown below.

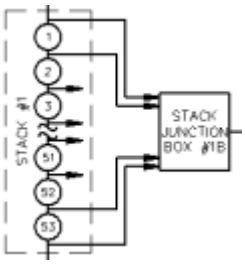

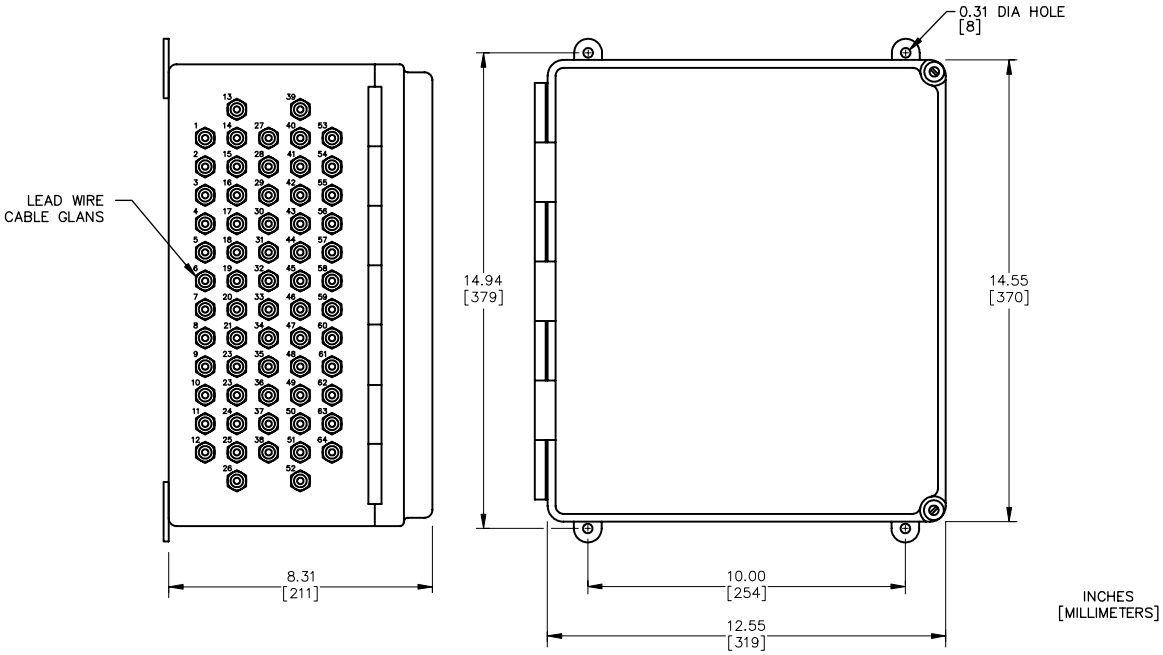

Electrolyser Monitor

The heart of the VDAS system is the Electrolyser Monitor (EM). The EM accepts inputs from the Electrolyser Stack Junction Boxes and the DC bus current signal. The EM processes analog data from the electrolysers and provides digital data to the central computer and computer workstations for all cell voltages, electrolyser symmetry, electrolyser current, and electrolyser voltage. The Electrolyser Monitor also provides a series of relay alarm contacts for cell voltage and symmetry. Digital data is communicated via fiber optic cable using Profibus DP or another protocol as the application requires. Multiple EMs can be connected to a single central computer.

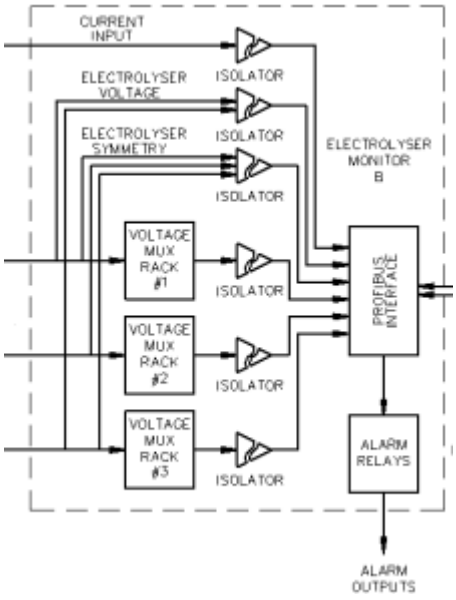

Data Acquisition Approach

The EM multiplexes the individual cell voltage signals from each collective cable in banks of 64 channels. Electrolyser symmetry is based upon the principle of a bridge circuit and is measured by comparing two halves of the electrolyser. An isolated output is provided which is proportional to the difference between the two halves. All inputs are overvoltage protected. Total electrolyser current and voltage are monitored directly. All input signals are isolated from each other as well as the the digital outputs.

Alarm Relay Outputs

Four programmable and one fixed alarm output associated with cell voltage and electrolyser symmetry are available directly from the EM. Alarms for overvoltage and a trip level are associated with symmetry. The overvoltage alarm is programmable from +0.2 … +1.2V, the trip level alarm is programmable from +0.4V … +2.4V.

Symmetry :	Overvoltage:	+ 0.2V … + 1.2V	Trip Alarm:	+ 0.4V … + 2.4V
Cell Voltage :	Under/over volt:	0.0V … 0.4V	Trip Alarm:	Fixed at 4.0V

Down-stream Data Processing, Analysis and Presentation

The DynAmp VDAS system provides users with the highest degree of flexibility regarding the use of the data gathered.

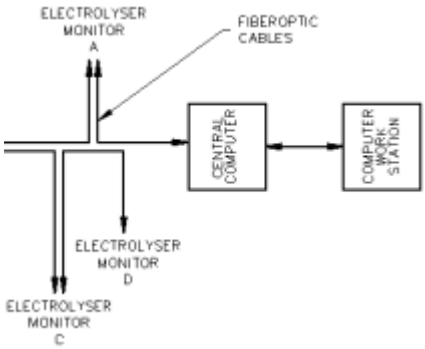

Thanks to utilizing industry standard and proven communication protocols, VDAS data can be easily handled by practically any existing plant network. This allows users to utilize their existing software and supervisory systems for data analysis, presentation and archiving. This minimises startup expense in terms of costs as well as staff training.

Should users wish to acquire a turn key system, DynAmp can integrate complete solutions including computer hardware, software and appliaction programming.

Service and Support

DynAmp provides expert services for high current system users. The DynAmp global network of service centers, subsidiaries and agents support industry's need for accurate, high current measurement. Field services include:

Start-up Service - Assures that all systems are properly installed and are functioning perfectly when the new line starts up.

Calibration Verification - Because our systems operate for many years, periodic, thorough examination assures correct operation and production efficiency.

On-site Troubleshooting - The best way to fix problems. Update to the latest design - Older systems can be improved to almost new features and specifications.

Equipment Rental - Temporarily need a system? Some models are available through DynAmp's Service Department.

Training - Equip in-house staff to handle and prevent problems.

Preventive Maintenance - Eliminates downtime and unexpected costs with less expensive, scheduled repair.

Statistical Characterization - Accurate, automated data acquisition provides permanent records of many readings

DynAmp Sales and Support

DynAmp Headquarters	**help@dynamp.com** **Tel : +01 614 871 6900** **Fax : +01 614 871 6910**
DynAmp Europe (CH)	**jfr@lem.com** **Tel : +41 22 706 1446** **Fax : +41 22 706 1311**
Scandinavia: Normet	petter.haavik@c2i.net Tel : +47 66 77 94 44 Fax : +47 667 794 45
South Africa: Denver Tech.	denvertech@pixie.co.za Tel : +27 11 626 2023 Fax : +27 11 626 2009
Japan: NANA LEM	mot@lem.com Tel : +81 639 540 73 Fax : +81 639 540 79
India: Sirius Controls	scpl@siriusindia.com Tel : +91 80 668 4207 Fax : +91 80 669 6957
Russia: Toxsoft	ssh@toxsoft.ru Tel : +7 095 917 4430 Fax : +7 095 928 6921
China: Beijing LEM	ybi@lem.com Tel : +86 10 804 90470 Fax : +86 10 804 90473

DynAmp Service Group

DynAmp

DynAmp Corporate History

1961 HALMAR — Halmar Electronics founded and develops DynAmp line of current measurement systems

1985 *LKC* — LEM enters high-accuracy current measurement over 10kA with their LKC systems

1992 HALMAR ROBICON GROUP — Halmar-Robicon sells DynAmp business to LEM

1995 LEM — LEM establishes High Current Systems business unit

1997 *LKP* — LEM HCS introduces LKP product line replacing CM, FM, CXM, ADM, LKC products

1999 LEM — European Market Service Center established

2003 — Existing HCS Managers purchase business with LEM support establishing DynAmp

European Market Service Center Geneva, Switzer-land

www.dynamp.com